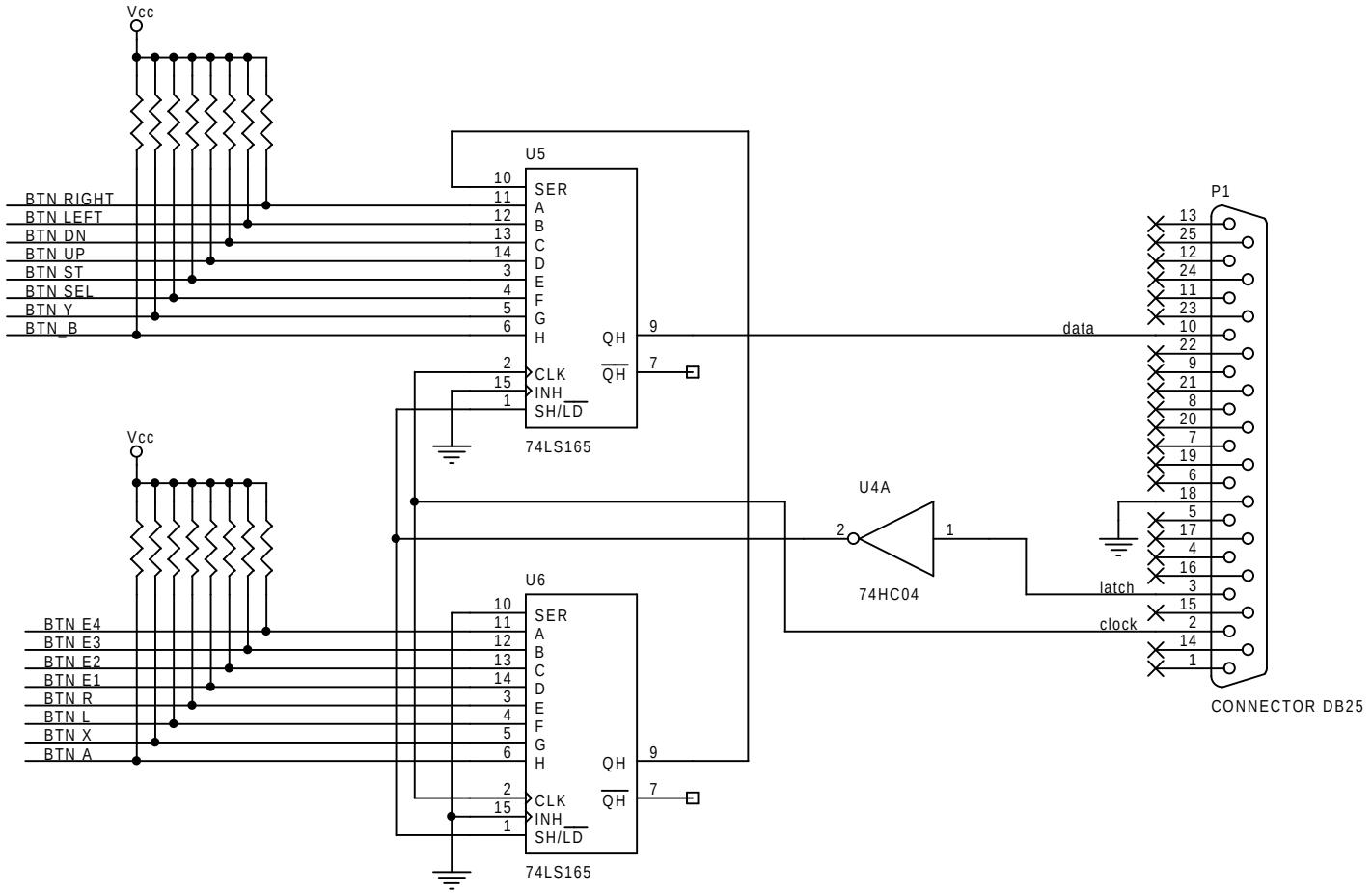

www.raphnet.net

Title	Snes controller	
Size A	Document Number {Doc}	Rev A
Date: Sunday, December 05, 2004	Sheet 1 of 3	