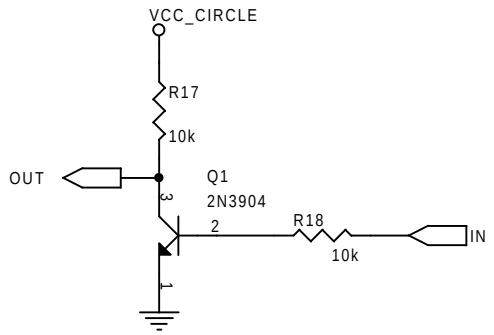

Title	Inverter		
Size	Document Number		Rev A
Date: Monday, November 22, 2004		Sheet 2 of 2	